Top Details 120 Volt LED Flood: 6x6x42 Bollard
* PLAN IS A GENERAL RECOMMENDATION
ADJUST TO LOCAL ELECTRICAL CODES

Attraction Lights, LLC
info@AtttractionLights.com
970-316-0019
Update: 6-23-17

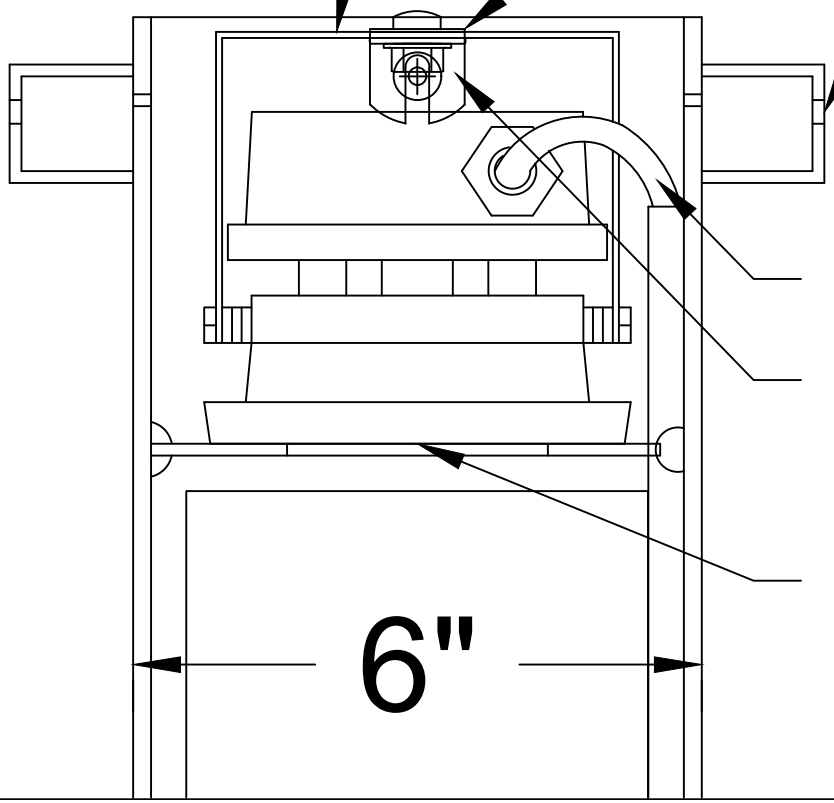

LED Flood Bracket hand bent/adjusted to allow better centering of Flood Light on top enclosure plate opening - See sample "bent bracket" provided
- Use wide jaw pliers with padding so as not to mar powder coat finish

Stainless steel bracket secures LED Flood
- Stainless bracket installed on top of LED Flood bracket
- Washer and flange nut under flood bracket fasten brackets together
- Hardware: 3 Philips 1/4x1/2" screws with 3 flange nuts, 1 - 3/8" washer

Blocking for 9 inch cap
Anti-Tamper Feature: Prevents cap from being pulled off
- Not Advised on powder coated bollards - will compromise finish
- On job site after squaring cap on bollard
- Mark set screw center on blocking (set screw marks blocking)
- Drill 1/4" hole in blocking

LED Flood lead wire is routed to 6x6 base for connection thru corner pipe
- **Leave slack lead wire in top for ease of future service**

Stainless steel bracket slotted ends supported on 6x6 wall by flange nut inside 6x6, screws (2) outside for tightening
- Screw passes thru 6x6 hole, threads into flange nut
- Stainless bracket slotted ends slide between 6x6 wall and flange nut

LED Flood rests on Top Enclosure Plate welded in 6x6
- Adjust angle of Flood Bracket bend to allow centering
- Adjust position of stainless steel bracket on supporting screws so flood rests securely on metal plate